Electrolux PROFESSIONAL

Modular Cooking Range Line thermaline 80 - 800 mm Passthrough open base, GN conform, 2 Sides (H2) - H=450

ITEM #

MODEL #

NAME #

SIS #

AIA #

588147 (MA2BCCHOOO) Passthrough Open Base, two-side operated, GN - H2

Short Form Specification

Item No.

800 mm wide open passthrough base compartment to store pots, pans, sheet pans, etc. with hygienic design and round edges. Internal frame for heavy duty sturdiness in stainless steel. Flat surface construction, easily cleanable. Open storage space in the base accepts GN 1/1 containers.
IPX5 water resistant certification.
Configuration: Two-side operated freestanding base, hygienic class H2.

APPROVAL:

Main Features

- All major components may be easily accessed from the front.
- Unit to be placed below modular top appliances to store pots, pans, sheet pans, etc.

Construction

- IPX5 water resistance certification.
- Hygienic design of the open base compartment with large round edges.
- Storage space in the base of the appliance that can accept GN1/1 containers.
- 2 mm top in 1.4301 (AISI 304).
- Flat surface construction with minimal hidden areas to easily clean all surfaces
- Internal frame for heavy duty sturdiness in stainless steel.

Modular Cooking Range Line thermaline 80 - 800 mm Passthrough open base, GN conform, 2 Sides (H2) - H=450

Front

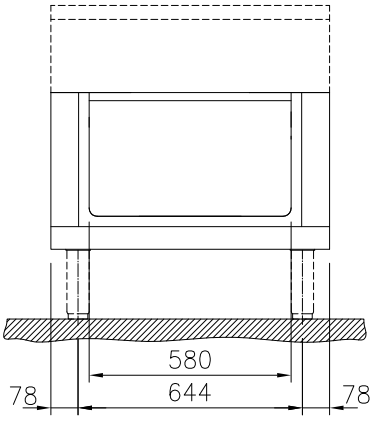

Side

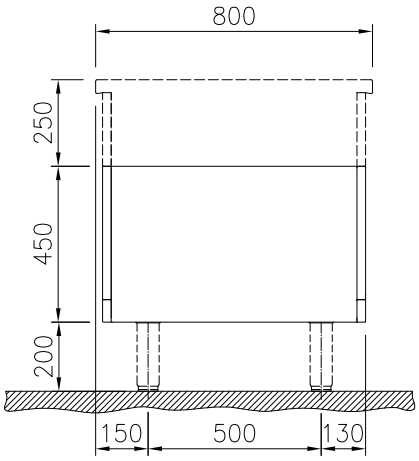

Top

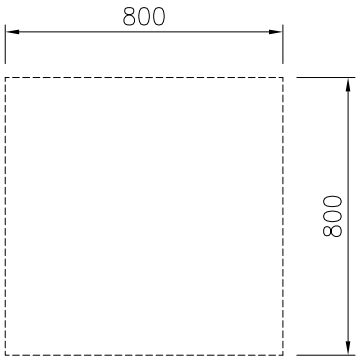

Key Information:

External dimensions, Width:	
588147 (MA2BCCHOOO)	800 mm
External dimensions, Depth:	800 mm
External dimensions, Height:	450 mm
Cupboard Cavity Dimensions (width):	580 mm
Cupboard Cavity Dimensions (height):	330 mm
Cupboard Cavity Dimensions (depth):	760 mm
Net weight:	20 kg

The company reserves the right to make modifications to the products without prior notice. All information correct at time of printing.

Optional Accessories

• Stainless steel side panel, 800x700mm, freestanding	PNC 912509	❑
• Stainless steel front kicking strip, 800mm width	PNC 912634	❑
• Stainless steel side kicking strip left and right, freestanding, 800mm width	PNC 912655	❑
• Stainless steel plinth, freestanding, 800mm width	PNC 912863	❑
• Perforated shelf for warming cabinets and cupboard bases (one-side operated TL80-85-90 and two-side operated for TL80)	PNC 913234	❑
• Side reinforced panel only in combination with side shelf, for freestanding units	PNC 913258	❑
• Shelf fixation for TL80-85-90 one-side operated, TL80 two-side operated	PNC 913281	❑
• Stainless steel dividing panel, 800x700mm, (it should only be used between Electrolux Professional thermaline Modular 80 and thermaline C80)	PNC 913668	❑
• Stainless steel side panel, 800x700mm, flush-fitting (it should only be used against the wall, against a niche and in between Electrolux Professional thermaline and ProThermetic appliances and external appliances - provided that these have at least the same dimensions)	PNC 913684	❑

The company reserves the right to make modifications to the products without prior notice. All information correct at time of printing.